TM 5-3

DEPARTMENT OF THE A

ORGANIZATIONAL MAI

AND SPECIA

WELDING SET, ARC,

PLASTIC OR MI

FOR 3/64 IN

TECHNICAL MANUAL
No. 5-3431-208-20P

ORGANIZATIONAL MAINTENANCE

WELDING SET, ARC, INER
METAL LINED GUN; FOR
(LINDE MOD
FSN 343

Current as of

SECTION I. INTRODUCTION

Scope
General
Explanation of columns
Special information
How to locate repair parts
Abbreviations
Federal supply codes for manufacturers
Recommendations for maintenance manual

II. PRESCRIBED LOAD ALLOWANCE

III. SPECIAL TOOLS, TEST AND SUPPORT
ORGANIZATIONAL MAINTENANCE (

IV. REPAIR PARTS FOR ORGANIZATIONAL

SI

INTR

1. Scope

This manual lists repair parts required for t
performance of organizational maintenance
the welding set.

2. General

a. The Repair Parts List is arranged as fo
lows:

(1) Individual parts and major assembli
are listed alphabetically by item name within t
numbered functional groups.

(2) Assembly components and subassembli
are indented and listed alphabetically by ite
name under major assemblies.

b. This Repair Parts and Special Tools Li
is divided into the following sections:

(1) *Prescribed Load Allowance (PLA)*
Section II. A consolidated listing of repair par
quantitatively allocated for initial stockage

(3) Recoverability code indicates whether unserviceable items should be returned for recovery or salvage. Items not coded are expendable. Recoverability codes are:

Code	Explanation
R	Applied to repair parts and assemblies which are economically repairable at DSU and GSU activities and normally are furnished by supply on an exchange basis.
T	Applied to high dollar value recoverable repair parts which are subject to special handling and are issued on an exchange basis. Such repair parts normally are repaired or overhauled at depot maintenance activities.
U	Applied to repair parts specifically selected for salvage by reclamation units because of precious metal content, critical materials, high dollar value reusable casings or castings.

(4) This column also lists, below the SMR code, an index number for each item in ascending numerical sequence, which is used to locate items in the publication when the Federal stock number and/or reference number is known.

b. Federal Stock Number. This column indicates the Federal stock number for the item.

c. Description. This column indicates the Federal item name and any additional description of the item required. A part number or other reference number is followed by the applicable five-digit Federal supply code for manufacturers in parenthesis. Material required for manufac-

(2) *Second.* Find the illustration covering the functional group to which the repair part belongs.

(3) *Third.* Identify the repair part on the illustration, and note the illustration figure and item number of the repair part.

(4) *Fourth.* Using the Repair Parts Listing, find the functional group to which the repair part belongs and locate the illustration figure and item number noted on the illustration.

b. When Federal stock number or reference number is known:

(1) *First.* Using the Index of Federal Stock Numbers and Reference Numbers, find the pertinent Federal Stock Number or Reference Number. This index is in ascending alpha-numeric sequence cross-referenced to an index number.

(2) *Second.* Using the Repair Part Listing, find the index number referenced in the Index of Federal Stock Numbers and Reference Numbers.

6. Abbreviations

amp.....ampere
dc.....direct current
dia.....diameter
ea.....each
ft.....feet (foot)

SECTION II. PRESCRIBED LOAD ALLOWANCE

(1) FEDERAL STOCK NUMBER	(2) DESCRIPTION USABLE ON CODE	(3) 15-DAY ORGANIZATIONAL MAINTENANCE ALLOWANCE (a) 1-5	(b) 6-20	(c) 21-50	(d) 51-100
	GROUP 22 - BODY CHASSIS OR HULL ACCESSORY ITEMS				
	2202 - ACCESSORY ITEMS				
3439-775-6476	ELECTRODE, WELDING	2	6	13	25
	GROUP 44 - WELDING EQUIPMENT				
	4409 - PROTECTIVE DEVICES, ELECTRICAL				
5920-280-4465	FUSE, CARTRIDGE		2	2	4
	4410 - SWITCHING, TIMING AND SPEED CONTROL				
3431-859-4242	VALVE, SOLENOID				2
3431-977-5382	CAPACITOR ASSEMBLY				2
3431-977-5385	CONTACTOR				2
5945-846-0433	RELAY, ARMATURE				2
	4411 - RESISTOR COMPONENTS				
5905-101-6865	RESISTOR, FIXED, WIRE WOUND				2
5905-173-6693	RESISTOR, ADJUSTABLE				2
5905-549-5659	RESISTOR, VARIABLE				2
5905-686-2872	RESISTOR, FIXED, WIRE WOUND				2
5905-834-7831	RESISTOR, ADJUSTABLE				2
	4413 - RECTIFIER COMPONENTS				
6130-859-4496	RECTIFIER				2
	4415 - HEAD, TORCH AND GUN UNITIZED COMPONENTS				
3431-893-3123	PRESSURE ROLL ASSEMBLY				2
3431-893-3124	TUBE, WIRE GUIDE	2	6	11	21
3431-893-3128	BUSHING, SLEEVE			2	2
3431-893-3130	BUSHING, SLEEVE			2	2
3431-977-5381	NOZZEL, TORCH		2	2	4
3431-977-5389	ROLLER, WIRE			2	2
3431-977-5393	RETAINER, NOZZLE LOCKING				2
3431-977-5394	SPRING NOZZLE, LOCKING		2	4	8
3431-977-5395	INSULATOR, SLEEVE				2
	GROUP 99 - PARTS REGULIAR				
	9901 - MULTI-LISTED PARTS				
5975-296-6984	BOX CONNECTOR, ELECTRICAL				2
5975-669-9467	BOX CONNECTOR, ELECTRICAL				2

(1) SMR CODE	(2) FEDERAL STOCK NUMBER	(3) DESCRIPTION REF NUMBER & MFR CODE	USABLE ON CODE	(4) UNIT OF MEAS	(5) QTY INC IN UNIT	(6) 15-DAY ORGANIZATIONAL MAINTENANCE ALW (a) 1-5	(b) 6-20	(c) 21-50	(d) 51-100	(7) ILLUSTRATION (a) FIG. NO.	(b) ITEM NO.
		SECTION IV - REPAIR PARTS FOR ORGANIZATIONAL MAINTENANCE									
00001		GROUP 22 - BODY CHASSIS OR HULL AND ACCESSORY ITEMS									
00002		2202 - ACCESSORY ITEMS									
P 0 00003	3431-981-1036	HOSE, ARGON: regulator to control assembly 521078 (36346)		EA	1	*	*	*	*	7	12
P 0 00004	3439-775-6476	ELECTRODE, WELDING 5052FB7 (36346)		EA	1	2	6	13	25		
00005		2210 - DATA PLATES									
X2 0 00006		NAMEPLATE: argon gas switch 46N16 (36346)		EA	1					2	9
X2 0 00007		PLATE, IDENTIFICATION 521075 (36346)		EA	1						
X2 0 00008		PLATE, IDENTIFICATION: fuseholder 521071 (36346)		EA	3					2	16
X2 0 00009		PLATE, IDENTIFICATION: line switch on-off 458670 (36346)		EA	1					2	15
X2 0 00010		PLATE, IDENTIFICATION: selector switch 14N78 (36346)		EA	1					2	30
X2 0 00011		PLATE, IDENTIFICATION: spare fuse 521072 (36346)		EA	1					1	13
X2 0 00012		PLATE, IDENTIFICATION: variable resistor welding control 48N67 (36346)		EA	1					2	7
X2 0 00013		PLATE,NAME: torch assembly 95N37 (36346)		EA	1					4	8
00014		GROUP 44 - WELDING EQUIPMENT									
00015		4407 - CONTROL PANELS, HOUSING									
X2 0 00016		CONTROL ASSEMBLY: voltage 521060 (36346)		EA	1					1	
X2 0 00017		ADAPTER, STRAIGHT, PIPE: solenoid valve to argon hose assembly 3389 (36346)		EA	1		SEE	GRP	4408		
P 0 00018	5975-669-9467	BOX CONNECTOR, ELECTRICAL: power cable, contactor cable, torch switch cable to control assembly 2522 (99730)		EA	3		SEE	GRP	4408		
P 0 00019	5975-296-6984	BOX CONNECTOR, ELECTRICAL: welding cable 458673 (36346)		EA	1		SEE	GRP	4408		
X2 0 00020		BRACKET, MOUNTING: rectifier 458676 (36346)		EA	2		SEE	GRP	4413		
X2 0 00021		BRACKET, MOUNTING: selector switch 52N31 (36346)		EA	1		SEE	GRP	4410		
X2 0 00022		BUMPER: control assembly 98W73 (36346)		EA	4					1	32
X2 0 00023		BUSHING, SEAL: argon gas switch and main line switch mtg 458689 (36346)		EA	2		SEE	GRP	4410		

(1) SMR CODE	(2) FEDERAL STOCK NUMBER	(3) DESCRIPTION REF NUMBER & MFR CODE	USABLE ON CODE	(4) UNIT OF MEAS	(5) QTY INC IN UNIT	(6) 15-DAY ORGANIZATIONAL MAINTENANCE ALW (a) 1-5	(b) 6-20	(c) 21-50	(d) 51-100	(7) ILLUSTRATION (a) FIG. NO.	(b) ITEM NO.
P O 00024	3431-977-5387	CABLE ASSEMBLY: contector to control assembly 458697 (36346)		EA	1		SEE	GRP	4408		
X2 O 00025		CABLE, ASSEMBLY, POWER 521068 (36346)		EA	1		SEE	GRP	4408		
X2 O 00026		CLAMP, LOOP, CABLE: control cabinet 1-2-4 (95987)		EA	3					1 2	40 22
P O 00027	3431-977-5396	CONNECTOR: argon hose 74576 (36346)		EA	1		SEE	GRP	4408		
P O 00028	3431-977-5392	CONNECTOR: torch power cable to control assembly 48V25 (36346)		EA	1		SEE	GRP	4408		
X2 O 00029		CONNECTOR: work pickup cable to control assembly 180473 (36346)		EA	1		SEE	GRP	4408		
P O 00030	5920-280-4465	FUSE, CARTRIDGE: voltage control cabinet, one amp, glass tube type, 250v, F1, F2, F3 82443 (36346)		EA	3		SEE	GRP	4409		
X2 O 00031		FUSEHOLDER: voltage control cabinet 458674 (36346)		EA	3		SEE	GRP	4409		
M O 00032		GASKET: door MANUFACTURE FROM:		EA	2					2	1
P O 00033	5330-202-3495	RUBBER STRIP, SOLID (8 1/2 in. required for each GASKET)		FT			SEE	GRP	9501		
M O 00034		GASKET: door MANUFACTURE FROM:		EA	2					2	27
P O 00035	5330-202-3495	RUBBER STRIP, SOLID (14 1/4 in. required for each GASKET)		FT			SEE	GRP	9501		
X2 O 00036		GASKET: handle 458721 (36346)		EA	2					1	20
M O 00037		GASKET: power cable, contactor cable, torch switch cable connector to control assembly 458709 (36346)		EA	4		SEE	GRP	4408		
X2 O 00038		GASKET: solenoid valve to control assembly 458714 (36346)		EA	1		SEE	GRP	4410		
X2 O 00039		GASKET: torch power cable connector to control assembly 458703 (36346)		EA	1		SEE	GRP	4408		
M O 00040		GASKET: welding cable box connector to control assembly 458710 (36346)		EA	1		SEE	GRP	4408		
X2 O 00041		GROMMET, RUBBER: argon hose connector to control assembly 92957 (36346)		EA	1		SEE	GRP	4408		
X2 O 00042		GROMMET, RUBBER: heatshield 97 (70485)		EA	1		SEE	GRP	4411		
X2 O 00043		HANDLE 521066 (36346)		EA	1					1	19
P O 00044	3431-859-4243	HOSE ASSEMBLY, ARGON GAS: torch power cable connector to solenoid valve 458704 (36346)		EA	1		SEE	GRP	4408		
X2 O 00045		INSULATOR: terminal board 06N11 (36346)		EA	1		SEE	GRP	4408		

(1) SMR CODE	(2) FEDERAL STOCK NUMBER	(3) DESCRIPTION REF NUMBER & MFR CODE	USABLE ON CODE	(4) UNIT OF MEAS	(5) QTY INC IN UNIT	(6) 15-DAY ORGANIZATIONAL MAINTENANCE ALW (a) 1-5	(b) 6-20	(c) 21-50	(d) 51-100	(7) ILLUSTRATION (a) FIG. NO.	(b) ITEM NO.
X2 0 00046		KNOB: variable resistor welding control 89MB1 (36346)		EA	1		SEE	GRP	4411		
X2 0 00047		MOUNT, FUSE: spare fuse 96M10 (36346)		EA	1		SEE	GRP	4409		
X2 0 00048		NAMEPLATE: argon gas switch 46M16 (36346)		EA	1		SEE	GRP	2210		
X2 0 00049		NUT, CAP: argon gas switch and main line switch mtg 458688 (36346)		EA	2		SEE	GRP	4410		
X2 0 00050	5310-262-6169	NUT, PLAIN, HEXAGON: adjustable resistor mtg		EA	2		SEE	GRP	4411		
X2 0 00051	5310-934-9757	NUT, PLAIN, HEXAGON: adjustable resistor mtg		EA	2		SEE	GRP	4411		
X2 0 00052	5310-934-9757	NUT, PLAIN, HEXAGON: armature relay mtg		EA	4		SEE	GRP	4410		
X2 0 00053	5310-934-9757	NUT, PLAIN, HEXAGON: cable clamp to control assembly mtg		EA	5					2	2
X2 0 00054	5310-934-9757	NUT, PLAIN, HEXAGON: current relay mtg		EA	2		SEE	GRP	4410		
X2 0 00055	5310-262-6169	NUT, PLAIN, HEXAGON: fixed resistor mtg		EA	2		SEE	GRP	4411		
X2 0 00056	5310-934-9757	NUT, PLAIN, HEXAGON: grounding screw and cabinet assembly bumper mtg		EA	5					1	1
X2 0 00057	5310-042-6903	NUT, PLAIN, HEXAGON: handle mtg		EA	4					1	48
X2 0 00058	5310-934-9757	NUT, PLAIN, HEXAGON: selector switch bracket mtg		EA	2		SEE	GRP	4410		
X2 0 00059	5310-720-7798	NUT, PLAIN, WING: ground lead mtg		EA	1					1	25
X2 0 00060		PLATE, IDENTIFICATION: fuseholder 521071 (36346)		EA	3		SEE	GRP	2210		
X2 0 00061		PLATE, IDENTIFICATION: instruction 521073 (36346)		EA	1						
X2 0 00062		PLATE, IDENTIFICATION: line switch, on-off 458670 (36346)		EA	1		SEE	GRP	2210		
X2 0 00063		PLATE, IDENTIFICATION: schematic wiring 521076 (36346)		EA	1						
X2 0 00064		PLATE, IDENTIFICATION: selector switch 14M78 (36346)		EA	1		SEE	GRP	2210		
X2 0 00065		PLATE, IDENTIFICATION: spare fuse 521072 (36346)		EA	1		SEE	GRP	2210		
X2 0 00066		PLATE, IDENTIFICATION: variable resistor welding control 48M67 (36346)		EA	1		SEE	GRP	2210		
X2 0 00067		PLATE: solenoid valve to control assembly 458713 (36346)		EA	1		SEE	GRP	4410		
P 0 00068	6130-859-4496	RECTIFIER: dry, SR 458675 (36346)		EA	1		SEE	GRP	4413		
P 0 00069	5945-173-8320	RELAY, ARMATURE: protective, PR 80M29 (36346)		EA	1		SEE	GRP	4410		

SMR CODE	FEDERAL STOCK NUMBER	DESCRIPTION REF NUMBER & MFR CODE	USABLE ON CODE	UNIT OF MEAS	QTY INC IN UNIT	15-DAY ORGANIZATIONAL MAINTENANCE ALW (a) 1-5	(b) 6-20	(c) 21-50	(d) 51-100	ILLUSTRATION (a) FIG. NO.	(b) ITEM NO.
P 0 00070	5945-846-0433	RELAY, ARMATURE: weld start and auxiliary weld start, 24v, dc, RA, RB 97W55 (36346)		EA	2		SEE	GRP	4410		
P 0 00071	5945-859-4497	RELAY, CURRENT: weld current, RC 458687 (36346)		EA	1		SEE	GRP	4410		
P 0 00072	5905-834-7831	RESISTOR, ADJUSTABLE: w/brackets, 250 ohm, 200 w, r1 89W80 (36346)		EA	1		SEE	GRP	4411		
P 0 00073	5905-686-2872	RESISTOR, FIXED, WIRE WOUND: 5 ohm, 5 w, R3 1D4BF5 (44655)		EA	1		SEE	GRP	4411		
P 0 00074	5905-549-5659	RESISTOR, VARIABLE: welding control, wire feed motor circuit, 75 ohm, 25 w, vr 0150 (44655)		EA	1		SEE	GRP	4411		
X2 0 00075	5305-984-6194	SCREW, MACHINE: adjustable resistor mtg		EA	2		SEE	GRP	4411		
X2 0 00076	5305-019-2207	SCREW, MACHINE: adjustable resistor mtg		EA	1		SEE	GRP	4411		
X2 0 00077	5305-013-2688	SCREW, MACHINE: armature relay mtg		EA	4		SEE	GRP	4410		
X2 0 00078	5305-984-6194	SCREW, MACHINE: armature relay mtg		EA	4		SEE	GRP	4410		
X2 0 00079	5305-984-6194	SCREW, MACHINE: cabinet assembly bumper mtg		EA	4					1	21
X2 0 00080	5305-984-6194	SCREW, MACHINE: cable clamp to control assembly mtg		EA	1					2	13
X2 0 00081	5305-984-6194	SCREW, MACHINE: current relay mtg		EA	2		SEE	GRP	4410		
X2 0 00082	5305-013-2727	SCREW, MACHINE: fixed resistor mtg		EA	1		SEE	GRP	4411		
X2 0 00083		SCREW, MACHINE: grounding and cable clamp to heatshield mtg MS35206-249 (96906)		EA	2					1	5
X2 0 00084	5305-984-7363	SCREW, MACHINE: handle mtg		EA	4					1	18
X2 0 00085	5305-984-6194	SCREW, MACHINE: selector switch bracket mtg		EA	2		SEE	GRP	4410		
X2 0 00086		SHIELD, HEAT: adjustable resistor 458692 (36346)		EA	1		SEE	GRP	4411		
X2 0 00087		SLIDER: adjustable resistor 458679 (36346)		EA	1		SEE	GRP	4411		
P 0 00088	5930-655-1508	SWITCH,TOGGLE: argon gas, S2 90W30 (36346)		EA	1		SEE	GRP	4410		
P 0 00089	5931-859-4241	SWITCH, TOGGLE: main line, S2 80W09 (36346)		EA	1		SEE	GRP	4410		
P 0 00090	5930-615-9182	SWITCH, TOGGLE: selector, 4 pole, double throw, w/neutral position; S3 96W38 (36346)		EA	1		SEE	GRP	4410		
P 0 00091	5940-983-6086	TERMINAL BOARD: control assembly, T1 91W66 (36346)		EA	1		SEE	GRP	4408		
X2 0 00092		TERMINAL, LUG 93W77 (36346)		EA	38					1	38

(1) SMR CODE	(2) FEDERAL STOCK NUMBER	(3) DESCRIPTION REF NUMBER & MFR CODE	USABLE ON CODE	(4) UNIT OF MEAS	(5) QTY INC IN UNIT	(6) 15-DAY ORGANIZATIONAL MAINTENANCE ALW (a) 1-5	(b) 6-20	(c) 21-50	(d) 51-100	(7) ILLUSTRATION (a) FIG. NO.	(b) ITEM NO.
X2 0 00093		TERMINAL, LUG: torch power connector assembly 98N84 (36346)		EA	1					1	37
P 0 00094	5931-859-4242	VALVE, SOLENOID: gas, GS 458677 (36346)		EA	1		SEE	GRP	4410		
X2 0 00095	5310-082-1404	WASHER, FLAT: fixed resistor mtg		EA	2		SEE	GRP	4411		
X2 0 00096	5310-187-1868	WASHER, FLAT: grounding screw attaching		EA	2					1	23
X2 0 00097	5310-013-1044	WASHER, LOCK: adjustable resistor mtg		EA	1		SEE	GRP	4411		
X2 0 00098	5310-559-0070	WASHER, LOCK: adjustable resistor mtg		EA	2		SEE	GRP	4411		
X2 0 00099	5310-559-0070	WASHER, LOCK: armature relay mtg		EA	4		SEE	GRP	4410		
X2 0 00100	5310-045-3299	WASHER, LOCK: cabinet assembly bumper mtg		EA	4					1	2
X2 0 00101	5310-559-0070	WASHER, LOCK: cable clamp to control assembly mtg		EA	3					2	3
X2 0 00102	5310-559-0070	WASHER, LOCK: current relay mtg		EA	2		SEE	GRP	4410		
X2 0 00103	5310-559-0070	WASHER, LOCK: fixed resistor mtg		EA	1		SEE	GRP	4411		
X2 0 00104	5310-559-0070	WASHER, LOCK: grounding screw attaching		EA	1					1	24
X2 0 00105	5310-527-3288	WASHER, LOCK: handle mtg		EA	4					1	47
X2 0 00106	5310-559-0070	WASHER, LOCK: selector switch bracket mtg		EA	2		SEE	GRP	4410		
M 0 00107		WIRE, ELECTRICAL: black (As required) MANUFACTURE FROM:		EA	0						
P 0 00108	6145-160-5120	WIRE, ELECTRICAL (3 ft required)		FT			SEE	GRP	9501		
M 0 00109		WIRE, ELECTRICAL: blue (As required) MANUFACTURE FROM:		EA	0						
P 0 00110	6145-635-9290	WIRE, ELECTRICAL (8 ft required)		FT			SEE	GRP	9501		
M 0 00111		WIRE, ELECTRICAL: brown (As required) MANUFACTURE FROM:		EA	0						
P 0 00112	6145-669-6680	WIRE, ELECTRICAL (4 ft required)		FT			SEE	GRP	9501		
M 0 00113		WIRE, ELECTRICAL: green (As required) MANUFACTURE FROM:		EA	0						
P 0 00114	6145-160-5118	WIRE, ELECTRICAL (1 ft required)		FT			SEE	GRP	9501		
M 0 00115		WIRE, ELECTRICAL: orange (As required) MANUFACTURE FROM:		EA	0						
P 0 00116	6145-160-5133	WIRE, ELECTRICAL (7 ft required)		FT			SEE	GRP	9501		
M 0 00117		WIRE, ELECTRICAL: red (As required) MANUFACTURE FROM:		EA	0						
P 0 00118	6145-669-6775	WIRE, ELECTRICAL (12 ft required)		FT			SEE	GRP	9501		

(1) SMR CODE	(2) FEDERAL STOCK NUMBER	(3) DESCRIPTION REF NUMBER & MFR CODE	USABLE ON CODE	(4) UNIT OF MEAS	(5) QTY INC IN UNIT	(6) 15-DAY ORGANIZATIONAL MAINTENANCE ALW (a) 1-5	(b) 6-20	(c) 21-50	(d) 51-100	(7) ILLUSTRATION (a) FIG. NO.	(b) ITEM NO.
M 0 00119		WIRE, ELECTRICAL: violet (As required) MANUFACTURE FROM:		EA	0						
P 0 00120	6145-295-0801	WIRE, ELECTRICAL (4 ft required)		FT			SEE	GRP	9501		
M 0 00121		WIRE, ELECTRICAL: white (As required) MANUFACTURE FROM:		EA	0						
P 0 00122	6145-504-1310	WIRE, ELECTRICAL (3 ft required)		FT			SEE	GRP	9501		
M 0 00123		WIRE, ELECTRICAL: yellow (As required) MANUFACTURE FROM:		EA	0						
P 0 00124	6145-160-5190	WIRE, ELECTRICAL (14 ft required)		FT			SEE	GRP	9501		
00125		4408 - CONNECTING DEVICES									
X2 0 00126		ADAPTER, STRAIGHT, PIPE: solenoid valve to argon hose assembly 3389 (36346)		EA	1					1	45
P 0 00127	5975-669-9467	BOX CONNECTOR, ELECTRICAL: contactor cabinet 2522 (59730)		EA	1		SEE	GRP	9901	3	3
P 0 00128	5975-296-6984	BOX CONNECTOR, ELECTRICAL: contactor cabinet 458673 (36346)		EA	2		SEE	GRP	9901	3	2
P 0 00129	5975-669-9467	BOX CONNECTOR, ELECTRICAL: power cable, contactor cable, torch switch cable to control assembly 2522 (59730)		EA	3		SEE	GRP	9901	1	31
P 0 00130	5975-296-6984	BOX CONNECTOR, ELECTRICAL: welding cable 458673 (36346)		EA	1		SEE	GRP	9901	1	10
P 0 00131	3431-977-5387	CABLE ASSEMBLY: contactor to control assembly 458697 (36346)		EA	1	*	*	*	*		
X1 00132		TERMINAL, CABLE 458686 (36346)		EA	1						
X1 00133		TERMINAL, LUG 93W77 (36346)		EA	6						
P 0 00134	3431-859-4239	CABLE ASSEMBLY, POWER 459789 (36346)		EA	1	*	*	*	*	5	4
X2 0 00135		CABLE ASSEMBLY, POWER 521068 (36346)		EA	1						
X1 00136		ADAPTER: PA 90A23 (36346)		EA	1						
X1 00137		CABLE 458686 (36346)		EA	1						
X1 00138		CONNECTOR, PLUG: P1 90A24 (36346)		EA	1						
X1 00139		TERMINAL, LUG 93W77 (36346)		EA	3						
P 0 00140	3431-018-3097	CABLE, CONTACTOR TO POWER SUPPLY 458716 (36346)		EA	1	*	*	*	*		
P 0 00141	3431-018-3098	CABLE, CONTACTOR TO VOLTAGE CONTROL 458717 (36346)		EA	1	*	*	*	*		
P 0 00142	3431-018-3096	CABLE, VOLTAGE CONTROL 458705 (36346)		EA	1	*	*	*	*		

(1) SMR CODE	(2) FEDERAL STOCK NUMBER	(3) DESCRIPTION REF NUMBER & MFR CODE	USABLE ON CODE	(4) UNIT OF MEAS	(5) QTY INC IN UNIT	(6) 15-DAY ORGANIZATIONAL MAINTENANCE ALW (a) 1-5	(b) 6-20	(c) 21-50	(d) 51-100	(7) ILLUSTRATION (a) FIG. NO.	(b) ITEM NO.
X1 00143		CABLE 458685 (36346)		EA	1						
X1 00144		CLAMP 95M39 (36346)		EA	1						
X1 00145		TERMINAL, LUG 93M77 (36346)		EA	1						
P 0 00146	3431-977-5396	CONNECTOR: argon hose 74576 (36346)		EA	1	*	*	*	*	1	8
P 0 00147	3431-977-5392	CONNECTOR: torch power cable to control assembly 48V25 (36346)		EA	1	*	*	*	*	1	36
X2 0 00148		CONNECTOR: work pickup cable to control assembly 180M73 (36346)		EA	1					1	30
X2 0 00149		CORD ASSEMBLY, GROUND: torch to control assembly 528286 (36346)		EA	1						
P 0 00150	3431-977-5388	CORD ASSEMBLY: trigger switch 459790 (36346)		EA	1	*	*	*	*	4	32
M 0 00151		GASKET: contactor cabinet box connector mtg 458710 (36346) MANUFACTURE FROM:		EA	2					3	28
P 0 00152	5330-543-7098	RUBBER SHEET, SOLID (2 in. x 2 in. required for each GASKET)		FT			SEE	ORP	9501		
M 0 00153		GASKET: contactor cabinet connector mtg 458709 (36346) MANUFACTURE FROM:		EA	1					3	21
P 0 00154	5330-543-7098	RUBBER SHEET, SOLID (1 1/2 in. x 1 1/2 in. required)		FT			SEE	ORP	9501		
M 0 00155		GASKET: power cable, contactor cable, torch switch cable connector to control assembly 458709 (36346) MANUFACTURE FROM:		EA	4					1	33
P 0 00156	5330-543-7098	RUBBER SHEET, SOLID (1 1/2 in. x 1 1/2 in. required for each GASKET)		FT			SEE	ORP	9501		
X2 0 00157		GASKET: torch power cable connector to control assembly 458703 (36346)		EA	1					1	35
M 0 00158		GASKET: welding cable box connector to control assembly 458710 (36346) MANUFACTURE FROM:		EA	1					1	42
P 0 00159	5330-543-7098	RUBBER SHEET, SOLID (2 in. x 2 in. required)		FT			SEE	ORP	9501		
X2 0 00160		GROMMET, RUBBER: argon hose connector to control assembly 92M57 (36346)		EA	1					1	9
P 0 00161	3431-859-4243	HOSE ASSEMBLY, ARGON GAS: torch power cable connector to solenoid valve 458704 (36346)		EA	1	*	*	*	*	1	39
X2 0 00162		INSULATOR: contactor terminal board to panel, fish paper, 2 1/2 in. lg, 1 1/2 in. w, 1/16 in. thk 06M52 (36346)		EA	1					3	18
X2 0 00163		INSULATOR SLEEVE, POWER CABLE: transflex plastic tubing 48N29 (36346)		EA	1					5	9

(1) SMR CODE	(2) FEDERAL STOCK NUMBER	(3) DESCRIPTION REF NUMBER & MFR CODE	USABLE ON CODE	(4) UNIT OF MEAS	(5) QTY INC IN UNIT	(6) 15-DAY ORGANIZATIONAL MAINTENANCE ALW (a) 1-5	(b) 6-20	(c) 21-50	(d) 51-100	(7) ILLUSTRATION (a) FIG. NO.	(b) ITEM NO.
X2 0 00164		INSULATOR: terminal board 06N11 (36346)		EA	1					1	29
X2 0 00165		LOCKNUT: contactor cabinet box connector mtg, 2 11/16 in. od, 1/2 in. w, u/w 1.9685 nominal shaft dia 97N44 (36346)		EA	2					3	26
X2 0 00166		LOCKNUT: contactor cabinet connector mtg 180W4 (36346)		EA	1					3	23
X2 0 00167	5310-262-6169	NUT, PLAIN, HEXAGON: contactor terminal board mtg		EA	4					3	17
X2 0 00168	5310-262-6169	NUT, PLAIN, HEXAGON: terminal board mtg		EA	4					1	26
X2 0 00169	5310-934-9757	NUT, PLAIN, HEXAGON: torch power cable connector mtg		EA	4					1	1
X2 0 00170		SCREW, CURRENT: power cable to current body (Special) 48R27 (36346)		EA	1					5	6
X2 0 00171	5305-013-2711	SCREW, MACHINE: contactor terminal board mtg		EA	3					3	20
X2 0 00172	5305-013-2719	SCREW, MACHINE: contactor terminal board mtg		EA	1					3	4
X2 0 00173	5305-889-3116	SCREW, MACHINE: ground cable to motor, housing attaching		EA	1						
X2 0 00174	5305-013-2711	SCREW, MACHINE: terminal board mtg		EA	3					1	16
X2 0 00175	5305-013-2719	SCREW, MACHINE: terminal board mtg		EA	1					1	28
X2 0 00176	5305-984-6194	SCREW, MACHINE: torch power cable connector to control assembly mtg		EA	4					1	21
P 0 00177	5940-983-6082	TERMINAL BOARD: contactor, T2 92W1 (36346)		EA	1	*	*	*	*	3	16
P 0 00178	5940-983-6086	TERMINAL BOARD: control assembly, T1 91W6 (36346)		EA	1	*	*	*	*	1	27
X2 0 00179		WASHER, FLAT: contactor cabinet box connector mtg, steel, 1 3/8 in. id, 1 7/8 in. od, 0.0359 in. thk 458719 (36346)		EA	2					3	27
X2 0 00180		WASHER, FLAT: contactor cabinet connector mtg, steel, 7/8 in. id, 1 1/4 in. od, 0.0359 in. thk 458718 (36346)		EA	1					3	22
X2 0 00181	5310-187-1851	WASHER, FLAT: power cable screw to current body		EA	2					5	5
X2 0 00182	5310-013-1044	WASHER, LOCK: contactor terminal board mtg		EA	4					3	5
X2 0 00183	5310-013-1044	WASHER, LOCK: terminal board mtg		EA	4					1	12
X2 0 00184	5310-045-3299	WASHER, LOCK: torch power cable connector mtg		EA	4					1	2

(1) SMR CODE	(2) FEDERAL STOCK NUMBER	(3) DESCRIPTION REF NUMBER & MFR CODE	USABLE ON CODE	(4) UNIT OF MEAS	(5) QTY INC IN UNIT	(6) 15-DAY ORGANIZATIONAL MAINTENANCE ALW (a) 1-5	(b) 6-20	(c) 21-50	(d) 51-100	(7) ILLUSTRATION (a) FIG. NO.	(b) ITEM NO.
00185		4409 - PROTECTIVE DEVICES, ELECTRICAL									
P 0 00186	5920-280-4465	FUSE, CARTRIDGE: voltage control cabinet one amp, glass tube type, 250v, F1, F2, F3 82443 (36346)		EA	3	*	2	2	4	1	17
X2 0 00187		FUSEHOLDER: voltage control cabinet 458674 (36346)		EA	3					2	17
M 0 00188		INSULATION: spare fuse mount to control assembly MANUFACTURE FROM:		EA	1					1	14
P 0 00189	5970-242-5019	INSULATION SHEET, ELECTRICAL (2 in. x 2 in. required)		SH			SEE	GRP	9501		
X2 0 00190		MOUNT, FUSE: spare fuse 96W10 (36346)		EA	1					1	15
X2 0 00191	5310-261-3109	NUT, PLAIN, CAP: spare fuse mount attaching		EA	1					1	11
X2 0 00192	5305-013-2711	SCREW, MACHINE: spare fuse mount attaching		EA	1					1	16
X2 0 00193	5310-013-1044	WASHER, LOCK: spare fuse mount attaching		EA	1					1	12
00194		4410 - SWITCHING, TIMING AND SPEED CONTROL									
X2 0 00195		BRACKET, MOUNTING: selector switch 52N31 (36346)		EA	1					2	29
X2 0 00196		BUSHING, SEAL: argon gas switch and main line switch mtg 458689 (36346)		EA	2					2	10
P 0 00197	3431-977-5382	CAPACITOR ASSEMBLY: torch, 0.05 uf, 600v, dc, C1 521287 (36346)		EA	1	*	*	*	2	4	28
X2 0 00198		CONTACTOR ASSEMBLY 521067 (36346)		EA	1					3	
P 0 00199	5975-669-9467	BOX CONNECTOR, ELECTRICAL: contactor cabinet 2522 (59730)		EA	1		SEE	GRP	4408		
P 0 00200	5975-296-6984	BOX CONNECTOR, ELECTRICAL: contactor cabinet 458673 (36346)		EA	2		SEE	GRP	4408		
X2 0 00201		CABINET: contactor 521069 (36346)		EA	1					3	1
X2 0 00202		COIL, MAGNET 25C751429 (56365)		EA	1					3	12
X2 0 00203		CONTACT, ELECTRICAL 33D801 (56365)		EA	2					3	11
P 0 00204	3431-977-5385	CONTACTOR: MC 488349 (36346)		EA	1	*	*	*	2	3	9
M 0 00205		GASKET: contactor cabinet MANUFACTURE FROM:		EA	2					3	24
P 0 00206	5330-202-3495	RUBBER STRIP, SOLID (9 in. required for each GASKET)		FT			SEE	GRP	9501		

(1) SMR CODE	(2) FEDERAL STOCK NUMBER	(3) DESCRIPTION REF NUMBER & MFR CODE	USABLE ON CODE	(4) UNIT OF MEAS	(5) QTY INC IN UNIT	(6) 15-DAY ORGANIZATIONAL MAINTENANCE ALW (a) 1-5	(b) 6-20	(c) 21-50	(d) 51-100	(7) ILLUSTRATION (a) FIG. NO.	(b) ITEM NO.
M 0 00207		GASKET: contactor cabinet box connector mtg 458710 (36346)		EA	2		SEE	GRP	4408		
M 0 00208		GASKET: contactor cabinet connector mtg 458709 (36346)		EA	1		SEE	GRP	4408		
M 0 00209		GASKET: door MANUFACTURE FROM:		EA	2					3	25
P 0 00210	5330-202-3495	RUBBER STRIP, SOLID (14 in. required for each GASKET)		FT			SEE	GRP	9501		
X2 0 00211		INSULATOR: contactor terminal board to panel, fish paper, 2 1/2 in. lg, 1 1/2 in. w, 1/16 in. thk 06852 (36346)		EA	1		SEE	GRP	4408		
X2 0 00212		LOCKNUT: contactor cabinet box connector mtg 180474 (36346)		EA	1		SEE	GRP	4408		
X2 0 00213		LOCKNUT: contactor cabinet box connector mtg 97444 (36346)		EA	2		SEE	GRP	4408		
X2 0 00214		NUT, PLAIN, HEXAGON: contact tip 63-300-121 (36346)		EA	4					3	10
X2 0 00215	5310-262-6169	NUT, PLAIN, HEXAGON: contactor terminal board mtg		EA	4		SEE	GRP	4408		
X2 0 00216	5310-761-6882	NUT, PLAIN, HEXAGON: contactor to mounting panel		EA	4					3	6
X2 0 00217		PANEL, MOUNTING 457664 (36346)		EA	1					3	8
X3 0 00218		PLATE, IDENTIFICATION 521074 (36346)		EA	1						
X2 0 00219		PLATE, IDENTIFICATION 521075 (36346)		EA	1		SEE	GRP	2210		
F 0 00220	5905-101-6865	RESISTOR, FIXED, WIRE WOUND: contactor terminal board, 2000 ohm, 10 w, R4 95422 (36346)		EA	1		SEE	GRP	4411		
X2 0 00221	5305-071-2239	SCREW, CAP, HEXAGON HEAD: contactor to mounting panel		EA	4					3	14
X2 0 00222	5305-068-0502	SCREW, CAP, HEXAGON HEAD: mounting panel to cabinet		EA	4					3	19
X2 0 00223	5305-013-2719	SCREW, MACHINE: contactor terminal board mtg		EA	1		SEE	GRP	4408		
X2 0 00224	5305-013-2711	SCREW, MACHINE: contactor to terminal board mtg		EA	3		SEE	GRP	4408		
X2 0 00225		SPRING, RETURN 250723 (56366)		EA	1						
P 0 00226	5940-983-6082	TERMINAL BOARD: contactor, T2 92W11 (36346)		EA	1		SEE	GRP	4408		
X2 0 00227		TERMINAL, LUG 488706 (36346)		EA	2						
X2 0 00228		TERMINAL, LUG 93W77 (36346)		EA	6						
X2 0 00229	5310-012-0386	WASHER, FLAT: contactor and panel mtg		EA	8					3	13
X2 0 00230		WASHER, FLAT: contactor cabinet box, connector mtg 458719 (36346)		EA	2		SEE	GRP	4408		

(1) SMR CODE	(2) FEDERAL STOCK NUMBER	(3) DESCRIPTION REF NUMBER & MFR CODE	USABLE ON CODE	(4) UNIT OF MEAS	(5) QTY INC IN UNIT	(6) 15-DAY ORGANIZATIONAL MAINTENANCE ALW (a) 1-5	(b) 6-20	(c) 21-50	(d) 51-100	(7) ILLUSTRATION (a) FIG. NO.	(b) ITEM NO.
X2 0 00231		WASHER, FLAT: contactor cabinet connector mtg 458718 (36346)		EA	1		SEE	GRP	4408		
X2 0 00232	5310-5824965	WASHER, LOCK: contactor and panel mtg		EA	8					3	7
X2 0 00233	5310-013-1044	WASHER, LOCK: contactor terminal board mtg		EA	4		SEE	GRP	4408		
M 0 00234		WIRE, ELECTRICAL: black MANUFACTURE FROM:		EA	1						
P 0 00235	6145-160-5120	WIRE, ELECTRICAL (10 in. required)		FT			SEE	GRP	9501		
M 0 00236		WIRE, ELECTRICAL: green MANUFACTURE FROM:		EA	1						
P 0 00237	6145-160-5118	WIRE, ELECTRICAL (3 in. required)		FT			SEE	GRP	9501		
M 0 00238		WIRE, ELECTRICAL: white MANUFACTURE FROM:		EA	1						
P 0 00239	6145-504-1310	WIRE, ELECTRICAL (12 in. required)		FT			SEE	GRP	9501		
X2 0 00240		GASKET: solenoid valve to control assembly 458714 (36346)		EA	1					1	44
X2 0 00241		NUT, CAP: argon gas switch and main line switch mtg 458688 (36346)		EA	2					2	11
X2 0 00242	5310-934-9757	NUT, PLAIN, HEXAGON: armature relay and selector switch bracket mtg		EA	6					2	2
X2 0 00243	5310-934-9757	NUT, PLAIN, HEXAGON: current relay mtg		EA	2					1	1
X2 0 00244		PLATE: solenoid valve to control assembly 458713 (36346)		EA	1					1	46
P 0 00245	5945-173-8320	RELAY, ARMATURE: proctive, PR 80M29 (36346)		EA	1	"	"	"	"	2	21
P 0 00246	5945-846-0433	RELAY, ARMATURE: weld start end auxiliary weld start, 24v, dc, RA, RB 97W55 (36346)		EA	2	"	"	"	2	2	4
P 0 00247	5945-859-4497	RELAY, CURRENT: weld current, NC 458687 (36346)		EA	1	"	"	"	"	1	34
X2 0 00248	5305-013-2688	SCREW, MACHINE: armature relay mtg		EA	4					2	18
X2 0 00249		SCREW, MACHINE: current relay mtg MS35206-249 (96906)		EA	2					1	5
X2 0 00250	5305-984-6194	SCREW, MACHINE: selector switch bracket and armature relay mtg		EA	4					2	13
X2 0 00251	5305-984-6193	SCREW, MACHINE: solenoid valve mtg		EA	2					1	22
X2 0 00252	5305-019-2662	SCREW, MACHINE: trigger switch mtg		EA	2					4	33
P 0 00253	5930-239-3661	SWITCH, PUSH: inching, S4 98W66 (36346)		EA	1	"	"	"	"	4	26
P 0 00254	5930-977-8915	SWITCH, SENSITIVE: trigger, S5 181W34 (36346)		EA	1	"	"	"	"	4	34
P 0 00255	5930-655-1508	SWITCH, TOGGLE: argon gas, S2 90W30 (36346)		EA	1	"	"	"	"	2	5
P 0 00256	5431-859-4241	SWITCH, TOGGLE: main line, S1 80W09 (36346)		EA	1	"	"	"	"	2	20

(1) SMR CODE	(2) FEDERAL STOCK NUMBER	(3) DESCRIPTION REF NUMBER & MFR CODE	USABLE ON CODE	(4) UNIT OF MEAS	(5) QTY INC IN UNIT	(6) 15-DAY ORGANIZATIONAL MAINTENANCE ALW (a) 1-5	(b) 6-20	(c) 21-50	(d) 51-100	(7) ILLUSTRATION (a) FIG. NO.	(b) ITEM NO.
P 0 00257	5930-615-9182	SWITCH, TOGGLE: selector, 4 pole, double throw, w/neutral position, S3 96938 (36346)		EA	1	*	*	*	*	2	28
P 0 00258	3431-859-4242	VALVE, SOLENOID: gas OS 458677 (36346)		EA	1	*	*	*	2	1	43
X2 0 00259	5310-559-0070	WASHER, LOCK: armature relay and selector switch bracket		EA	6					2	3
X2 0 00260	5310-559-0070	WASHER, LOCK: current relay mtg		EA	2					1	24
00261		4411 - RESISTOR COMPONENTS									
X2 0 00262		GROMMIT, RUBBER: heat shield 97 (70485)		EA	1					1	6
X2 0 00263		KNOB: variable resistor welding control 89481 (36346)		EA	1					2	8
X2 0 00264	5310-934-9757	NUT, PLAIN, HEXAGON: adjustable resistor mtg		EA	2					1	1
X2 0 00265	5310-262-6169	NUT, PLAIN, HEXAGON: adjustable resistor mtg		EA	4					2	31
X2 0 00266	5310-262-6169	NUT, PLAIN, HEXAGON: contactor fixed resistor mtg		EA	1					3	17
P 0 00267	5905-834-7831	RESISTOR, ADJUSTABLE: w/brackets, 250 ohm, 200w, R1 89480 (36346)		EA	1	*	*	*	2	1	4
P 0 00268	5905-173-6693	RESISTOR, ADJUSTABLE: 600 ohm, 25 w, R2 0373 (44655)		EA	1	*	*	*	2	2	34
P 0 00269	5905-101-6865	RESISTOR, FIXED, WIRE WOUND: contactor terminal board, 2000 ohm, 10 w, R4 95422 (36346)		EA	1	*	*	*	2	3	15
P 0 00270	5905-686-2872	RESISTOR, FIXED, WIRE WOUND: 5 ohm, 5 w, R3 1DL875 (44655)		EA	1	*	*	*	2	2	37
P 0 00271	5905-549-5659	RESISTOR, VARIABLE: welding control, wire feed motor circuit, 75 ohm, 25 w, VR U150 (44655)		EA	1	*	*	*	2	2	6
X2 0 00272	5305-984-6194	SCREW, MACHINE: adjustable resistor mtg		EA	2					1	21
X2 0 00273	5305-049-2207	SCREW, MACHINE: adjustable resistor mtg		EA	1					2	14
X2 0 00274	5305-013-2727	SCREW, MACHINE: fixed resistor mtg		EA	1					2	12
X2 0 00275		SHIELD, HEAT: adjustable resistor 458692 (36346)		EA	1					1	7
X2 0 00276		SLIDER: adjustable resistor 458676 (36346)		EA	1					1	41
X2 0 00277		WASHER, CENTERING: adjustable resistor mtg, 3/16 in. id, 1/2 in. od, 1/64 in. thk, 5/64 in. thk of concaved portion 92958 (36346)		EA	4					1 2	2 32
X2 0 00278	5310-082-1404	WASHER, FLAT: fixed resistor mtg		EA	2					2	36
X2 0 00279	5310-045-3299	WASHER, LOCK: adjustable resistor mtg		EA	2					1	3
X2 0 00280	5310-013-1044	WASHER, LOCK: adjustable resistor mtg		EA	1					2	35

(1) SMR CODE	(2) FEDERAL STOCK NUMBER	(3) DESCRIPTION REF NUMBER & MFR CODE	(4) UNIT OF MEAS	(5) QTY INC IN UNIT	(6) 15-DAY ORGANIZATIONAL MAINTENANCE ALW (a) 1-5	(b) 6-20	(c) 21-50	(d) 51-100	(7) ILLUSTRATION (a) FIG. NO.	(b) ITEM NO.
X2 C 00281	5310-579-0070	WASHER, LOCK: fixed resistor mtg	EA	1					2	38
M O 00282		WASHER, MICA: adjustable resistor mtg 97W74 (36346) MANUFACTURE FROM:	EA	2					2	33
P O 00283	9970-242-5019	INSULATION SHEET, ELECTRICAL (2 in. x 2 in. required for each WASHER)	SH			SEE	GRP	9501		
00284		4413 - RECTIFIER COMPONENTS								
X2 C 00285		BRACKET, MOUNTING: rectifier 458676 (36346)	EA	2					2	24
X2 O 00286	5310-934-9757	NUT, PLAIN, HEXAGON: rectifier bracket mtg	EA	4					2	2
X2 O 00287	5310-042-6903	NUT, PLAIN, HEXAGON: rectifier to bracket mtg	EA	2					2	23
P O 00288	6130-859-4496	RECTIFIER: dry, SR 458675 (36346)	EA	1	"	"	"	2	2	25
X2 O 00289	5305-012-1832	SCREW, MACHINE: rectifier bracket mtg	EA	4					2	19
X2 O 00290	5310-262-4481	WASHER, FLAT: rectifier bracket mtg	EA	4					2	26
X2 O 00291	5310-559-0070	WASHER, LOCK: rectifier bracket mtg	EA	4					2	3
00292		4415 - HEAD, TORCH AND GUN UNITIZED COMPONENTS								
X2 O 00293		TORCH ASSEMBLY 521180 (36346)	EA	1						
X2 O 00294		BLOCK AND LEAD: current pickup 48V36 (36346)	EA	1					4	11
X2 O 00295	5305-717-6955	SETSCREW: block and lead attaching	EA	1					4	10
X2 O 00296		TERMINAL, LUG: block and lead to current 93W77 (36346)	EA	1					4	16
X2 O 00297		BLOCK, MOUNTING: contact shoe 48H83 (36346)	EA	1					4	12
P O 00298	3431-859-4240	BODY, CURRENT 48V03 (36346)	EA	1	"	"	"	"	5	10
P O 00299	3431-977-5383	BOOT, HANDLE 56H32 (36346)	EA	1	"	"	"	"	5	22
X2 O 00300		BUSHING, SLEEVE: insulator plate 48N20 (36346)	EA	1					5	23
P O 00301	3431-893-3128	BUSHING, SLEEVE: inlet guide 48N56 (36346)	EA	1	"	"	2	2	4	1
P O 00302	3431-893-3130	BUSHING, SLEEVE: outlet guide 48N59 (36346)	EA	1	"	"	2	2	4	18
P O 00303	3431-859-4239	CABLE ASSEMBLY, POWER 459789 (36346)	EA	1		SEE	GRP	4408		
P O 00304	3431-977-5382	CAPACITOR ASSEMBLY: torch, .05 uf, 600v, dc, C1 521287 (36346)	EA	1		SEE	GRP	4410		

(1) SMR CODE	(2) FEDERAL STOCK NUMBER	(3) DESCRIPTION REF NUMBER & MFR CODE	USABLE ON CODE	(4) UNIT OF MEAS	(5) QTY INC IN UNIT	(6) 15-DAY ORGANIZATIONAL MAINTENANCE ALW (a) 1-5	(b) 6-20	(c) 21-50	(d) 51-100	(7) ILLUSTRATION (a) FIG. NO.	(b) ITEM NO.
X2 0 00305		CLAMP, CABLE: torch 48M49 (36346)		EA	1					6	20
X2 0 00306		CORD ASSEMBLY, GROUND: torch to control assembly 521286 (36346)		EA	1		SEE	GRP	4408		
P 0 00307	3431-977-5388	CORD ASSEMBLY: trigger switch 459790 (36346)		EA	1		SEE	GRP	4408		
X2 0 00308		COVER ASSEMBLY: spool enclosure 48M45 (36346)		EA	1					6	11
P 0 00309	3431-977-5391	DISC ASSEMBLY, FRICTION 48M17 (36346)		EA	1	*	*	*	*	6	16
X1 00310		ARM, FRICTION DISC 48M38 (36346)		EA	1						
X1 00311		DISC, FRICTION 48M37 (36346)		EA	1						
X1 00312	5305-053-1108	SCREW, TAPPING, THREAD FORMING: friction disc to arm attaching		EA	2						
X2 0 00313		ENCLOSURE, SPOOL 521289 (36346)		EA	1					6	4
X2 0 00314		ENDPLATE: handle 48M21 (36346)		EA	1					4	27
X2 0 00315		GASKET: insulator plate to motor housing 48M19 (36346)		EA	1					5	25
X2 0 00316		HOUSING, FRONT 48M11 (36346)		EA	1					5	13
X2 0 00317		INSULATOR, PLATE 48M18 (36346)		EA	1					5	24
X2 0 00318		INSULATOR SLEEVE: block and lead, misc tubing, 0.205 in. id, 0.237 in. od, 1 in. lg 48M78 (36346)		EA	1					4	17
P 0 00319	3431-977-5395	INSULATOR SLEEVE: current body 56M17 (36346)		EA	1	*	*	*	2	5	11
X2 0 00320		INSULATOR SLEEVE, POWER CABLE: transflex plastic tubing 48M29 (36346)		EA	1		SEE	GRP	4408		
X2 0 00321		INSULATOR SLEEVE: wire leads to handle, transflex tubing, clear, 3/8 in. id, 7/16 in. od, 1 5/8 in. lg 48M51 (36346)		EA	2					4	35
A 0 00322		NOZZLE ASSEMBLY: torch 521179 (36346)		EA	1						
P 0 00323	3431-981-1033	HOLDER, NOZZEL 59M78 (36346)		EA	1	*	*	*	*	5	20
P 0 00324	3431-977-5381	NOZZEL, TORCH 59M88 (36346)		EA	1	*	2	2	4	5	17
P 0 00325	3431-977-5393	RETAINER, NOZZEL LOCKING 59M89 (36346)		EA	1	*	*	*	2	5	18
P 0 00326	3431-977-5394	SPRING NOZZEL LOCKING 59M90 (36346)		EA	1	*	2	4	8	5	19
X2 0 00327	5310-934-9757	NUT, PLAIN, HEXAGON: thumbscrew locking		EA	1					4	3
X2 0 00328		PLATE, NAME: torch assembly 59M37 (36346)		EA	1		SEE	GRP	2210		
P 0 00329	3431-893-3123	PRESSURE ROLL ASSEMBLY 48M05 (36346)		EA	1	*	*	*	2	4	6

(1) SMR CODE	(2) FEDERAL STOCK NUMBER	(3) DESCRIPTION REF NUMBER & MFR CODE	USABLE ON CODE	(4) UNIT OF MEAS	(5) QTY INC IN UNIT	(6) 15-DAY ORGANIZATIONAL MAINTENANCE ALY (a) 1-5	(b) 6-20	(c) 21-50	(d) 51-100	(7) ILLUSTRATION (a) FIG. NO.	(b) ITEM NO.
X2 0 00330		RETAINER, CAP: friction disc assembly centering, nylon rod, 0.627 in. id, 5/8 in. od, 0.031 in. thk, stepped, 2nd step, 0.234 in. od, 0.031 in. thk 48M43 (36346)		EA	1					6	15
X2 0 00331		RETAINER: feed roll attaching, nylon, 1/8 in. id, 1/2 in. od, 1/8 in. thk stepped, 2nd step, 0.374 in. od, 0.078 in. thk 48M75 (36346)		EA	1					4	21
X2 0 00332		RING, LOCATING: brake screw 48N39 (36346)		EA	1					6	7
P 0 00333	3431-977-5389	ROLLER, WIRE: spool enclosure 48M45 (36346)		EA	1	*	*	2	2	6	18
X2 0 00334		SCREW, BRAKE: spool enclosure 48N18 (36346)		EA	1					6	9
X2 0 00335		SCREW, CURRENT: power cable to current body (Special) 48N27 (36346)		EA	1		SEE	GRP	4408		
X2 0 00336	5305-984-4976	SCREW, MACHINE: block mtg		EA	1					4	15
X2 0 00337	5305-889-3116	SCREW, MACHINE: cable shield mtg		EA	5					5	1
X2 0 00338	5305-984-4976	SCREW, MACHINE: cable shield mtg		EA	1					5	3
X2 0 00339	5305-013-2631	SCREW, MACHINE: cover assembly to spool enclosure mtg		EA	3					6	13
X2 0 00340		SCREW, MACHINE: current pickup block and lead attaching MS35214-25 (96906)		EA	1					5	8
X2 0 00341	5305-013-2688	SCREW, MACHINE: endplate to handle mtg		EA	4					4	25
X2 0 00342	5305-290-2046	SCREW, MACHINE: feed roll and current sleeve mtg		EA	1					4	19
X2 0 00343	5305-013-2735	SCREW, MACHINE: friction disc assembly attaching		EA	1					6	14
X2 0 00344	5305-013-2727	SCREW, MACHINE: front housing attaching		EA	4					5	15
X2 0 00345	5305-889-3116	SCREW, MACHINE: ground cable to motor housing attaching		EA	1		SEE	GRP	4408		
X2 0 00346	5305-207-3239	SCREW, MACHINE: holdar to sleeve assembly attaching		EA	3					5	21
X2 0 00347	5305-984-6210	SCREW, MACHINE: mtg shaft to spool enclosure		EA	1					6	1
X2 0 00348		SCREW, MACHINE: nameplate mtg MS24629-11 (96906)		EA	2						
X2 0 00349	5305-013-2723	SCREW, MACHINE: pressure roll assembly mtg		EA	1					4	5
X2 0 00350	5305-012-1832	SCREW, MACHINE: spool enclosure to motor housing attaching		EA	5					6	19
X2 0 00351	5305-984-6192	SCREW, MACHINE: torch cable clamp mtg		EA	2					6	22
X2 0 00352	5305-013-2636	SCREW, MACHINE: trigger assembly mtg		EA	4					4	29
X2 0 00353	5305-019-2662	SCREW, MACHINE: trigger switch mtg		EA	2		SEE	GRP	4410		

(1) SMR CODE	(2) FEDERAL STOCK NUMBER	(3) DESCRIPTION REF NUMBER & MFR CODE	USABLE ON CODE	(4) UNIT OF MEAS	(5) QTY INC IN UNIT	(6) 15-DAY ORGANIZATIONAL MAINTENANCE ALW (a) 1-5	(b) 6-20	(c) 21-50	(d) 51-100	(7) ILLUSTRATION (a) FIG. NO.	(b) ITEM NO.
P O 00354	5305-977-5512	SCREW, SELF-LOCKING: contact tube 48V09 (36346)		EA	1	*	*	*	*	5	14
X2 O 00355	5305-719-5339	SETSCREW: inlet guide bushing attaching		EA	1					4	2
X2 O 00356	5305-719-5353	SETSCREW: outlet guide bushing		EA	1					4	9
X2 O 00357		SHAFT ASSEMBLY: feed roll and current sleeve mtg 48V15 (36346)		EA	1					4	23
X2 O 00358		SHAFT, MOUNTING: spool 48V16 (36346)		EA	1					6	6
X2 O 00359		SHIELD, CABLE 48N30 (36346)		EA	1					5	2
M O 00360		SHIM: cover assembly to spool enclosure MANUFACTURE FROM:		EA	5					6	10
P O 00361	5330-599-7216	PAPER, GASKET (1 3/4 by 3/8 in. required for each SHIM)		FT			SEE	GRP	9501		
P O 00362	3431-893-3134	SHOE, CONTACT 48N82 (36346)		EA	1	*	*	*	*	4	14
P O 00363	3431-893-3126	SLEEVE, FEED ROLL AND CURRENT 48V35 (36346)		EA	1	*	2	2	2	4	22
P O 00364	3431-859-4227	SLEEVE, INSULATOR: nozzel assembly 48U08 (36346)		EA	1	*	*	*	2	5	12
X2 O 00365		SPACER: current pickup block and lead, brass, 5/16 in. od, 7/64 in. thk, No. 27 drill size id 48N74 (36346)		EA	1					5	7
P O 00366	5360-893-3133	SPRING, HELICAL, COMPRESSION: shoe block 48N85 (36346)		EA	1	*	*	*	*	4	13
P O 00367	3431-977-5390	SPRING, TRIGGER 48N50 (36346)		EA	1	*	*	*	2	4	30
X2 O 00368		SPRING, WELDING SET: friction disc 48N42 (36346)		EA	1					6	8
P O 00369	5930-239-3661	SWITCH, PUSH: inching, S4 98W66 (36346)		EA	1		SEE	GRP	4410		
P O 00370	5930-977-8915	SWITCH, TRIGGER: trigger, S5 181W34 (36346)		EA	1		SEE	GRP	4410		
X2 O 00371		THUMBSCREW: feed roll adjusting, cadmium or zinc plated, No. 8-32 thd size, 5/8 in. lg 48N48 (36346)		EA	1					4	4
X2 O 00372		TRIGGER ASSEMBLY 48V07 (36346)		EA	1					4	31
P O 00373	3431-893-3124	TUBE, WIRE GUIDE: contact 48N53 (36346)		EA	1	2	6	11	21	5	16
X2 O 00374		WASHER, FLAT: arm to spool enclosure, nylon sheet, 3/8 in. od, 3/32 in. thk, No. 27 drill id 49N82 (36346)		EA	1					6	17
X2 O 00375	5310-950-1310	WASHER, FLAT: cover assembly to spool enclosure mtg		EA	3					6	12
X2 O 00376		WASHER, FLAT: feed roll shaft to motor, teflon sheet, 0.257 in. id, 3/4 in. od, 0.031 in. thk 48N33 (36346)		EA	1					4	24

(1) SMR CODE	(2) FEDERAL STOCK NUMBER	(3) DESCRIPTION REF NUMBER & MFR CODE	USABLE ON CODE	(4) UNIT OF MEAS	(5) QTY INC IN UNIT	(6) 15-DAY ORGANIZATIONAL MAINTENANCE ALW (a) 1-5	(b) 6-20	(c) 21-50	(d) 51-100	(7) ILLUSTRATION (a) FIG. NO.	(b) ITEM NO.
X2 0 00377		WASHER, FLAT: mtg ehaft to epcol enclosure MS27183-8 (96906)		EA	1					6	3
X2 0 00378	5310-187-1851	WASHER, FLAT: power cable screw to current body		EA	2		SEE	GRP	4408		
X2 0 00379	5310-543-2410	WASHER, LOCK: feed roll and current sleeve mtg		EA	1					4	20
X2 0 00380	5310-043-2226	WASHER, LOCK: mtg ehaft to epcol enclosure		EA	1					6	2
X2 0 00381	5310-045-3299	WASHER, LOCK: torch cable clamp mtg		EA	2					6	21
X2 0 00382		WASHER, SPACING: epool mtg ehaft, plastic, 0.343 in. id, 13/16 in. od, 0.109 in. thk 48H36 (36346)		EA	1					6	5
00383		GROUP 47 - GAGES (NON-ELECTRICAL) WEIGHING AND MEASURING DEVICES									
00384		4702 - GAGES									
P 0 00385	6685-981-1194	GAGE, PRESSURE 627Y14 (36346)		EA	1	"	"	"	"	7	1
P 0 00386	5355-981-1193	WINDOW, DIAL: pressure 72A70 (36346)		EA	1	"	"	"	"	7	2
00387		4705- FLOW METERS AND REGULATORS									
P 0 00388	3431-979-5386	REGULATOR AND FLOW METER: argon 04X34 (36346)		EA	1	"	"	"	"		
X1 00389		BODY: argon regulating tube 80250 (36346)		EA	1						
X1 00390		BODY: regulator 80251 (36346)		EA	2						
X1 00391		BODY: relief valve 80283 (36346)		EA	2						
X1 00392		CAP: regulator, front 31264 (36346)		EA	1						
X1 00393		CAP: regulator, front 31275 (36346)		EA	1						
X1 00394		CAP: relief valve 31273 (36346)		EA	2						
X1 00395		CAP: second stage 31263 (36346)		EA	2						
X1 00396		DIAPHRAGM: regulator body 30258 (36346)		EA	2						
P 0 00397	6685-981-1194	GAGE, PRESSURE 627Y14 (36346)		EA	1		SEE	GRP	4702		
X1 00398		GASKET: body 77269 (36346)		EA	2						
X1 00399		GLAND: calibrated tube assembly 82243 (36346)		EA	1						
X1 00400		GUARD, TUBE 68270 (36346)		EA	1					7	7
X1 00401		GUIDE: front cap 77272 (36346)		EA	2						

(1) SMR CODE	(2) FEDERAL STOCK NUMBER	(3) DESCRIPTION REF NUMBER & MFR CODE / USABLE ON CODE	(4) UNIT OF MEAS	(5) QTY INC IN UNIT	(6) 15-DAY ORGANIZATIONAL MAINTENANCE ALW (a) 1-5	(b) 6-20	(c) 21-50	(d) 51-100	(7) ILLUSTRATION (a) FIG. NO.	(b) ITEM NO.
X1 00402		GUIDE: nozzle 77273 (36346)	EA	2						
X1 00403		NOZZLE: regulator 02221 (36346)	EA	2						
X1 00404		NOZZLE: relief valve 32265 (36346)	EA	2						
X1 00405		NUT, PLAIN, CAP: regulator 6372-0100 (36346)	EA	2						
X1 00406		NUT, PLAIN, HEXAGON: yoke attaching 6310-0927 (36346)	EA	2						
X1 00407		O RING: argon regulating sleeve, comp, 3/8 in. id, 9/16 in. od, 3/32 in. w 85437 (36346)	EA	1						
X1 00408		PACKING, PREFORMED: regulator, composition, 3/8 in. 9/16 in. od, 3/32 in. thk 84485 (36346)	EA	2						
X2 0 00409		PACKING, PREFORMED: tube to regulator 84484 (36346)	EA	1					7	3
X1 00410		PLATE: diaphragm 30257 (36346)	EA	2						
X1 00411		SCREEN: tube body, body float ball 05236 (36346)	EA	6						
X1 00412		SCREW: front cap attaching 6170-6911 (36346)	EA	8						
X1 00413		SCREW, MACHINE: front cap attaching 6170-6882 (36346)	EA	4						
X1 00414	5305-515-7156	SCREW, MACHINE: second stage cap attaching	EA	8						
X1 00415		SCREW, MACHINE: tube guard mtg 6170-0851 (36346)	EA	1					7	8
X1 00416		SCREW, MACHINE: tube guard mtg 6170-0878 (36346)	EA	2					7	6
X1 00417		SEAT: first stage nozzel 32260 (36346)	EA	2						
X1 00418		SEAT: relief valve 33756 (36346)	EA	2						
X1 00419		SETSCREW: pressure adjusting special 34263 (36346)	EA	1						
X1 00420		SLEEVE: argon stem assembly regulating 92201 (36346)	EA	1						
X1 00421		SPRING: relief valve 29224 (36346)	EA	1						
X1 00422		SPRING: relief valve 29225 (36346)	EA	1						
X1 00423		SPRING RETAINER: cap 77267 (36346)	EA	1						
X1 00424		SPRING: second stage 29204 (36346)	EA	1						
X1 00425		SPRING: second stage pressure adjusting 29202 (36346)	EA	1						
X1 00426		STEM ASSEMBLY: argon regulating 33148 (36346)	EA	1						
X2 0 00427		STOP, BALL: tube body 150229 (36346)	EA	1					7	10

(1) SMR CODE	(2) FEDERAL STOCK NUMBER	(3) DESCRIPTION REF NUMBER & MFR CODE	USABLE ON CODE	(4) UNIT OF MEAS	(5) QTY INC IN UNIT	(6) 15-DAY ORGANIZATIONAL MAINTENANCE ALW (a) 1-5	(b) 6-20	(c) 21-50	(d) 51-100	(7) ILLUSTRATION (a) FIG. NO.	(b) ITEM NO.
X1 00428		STUD: regulator 34266 (36346)		EA	2						
P O 00429	3431-981-1034	TUBE, GAGE, REGULATOR 27284 (36346)		EA	1	"	"	"	"	7	9
X1 00430		BUMPER: flow meter tube 52834 (36346)		EA	1						
X1 00431		RETAINER: ball float bumper 78262 (36346)		EA	1						
P O 00432	3431-981-1035	TUBE GAGE REGULATOR: calibrated 55144 (36346)		EA	1	"	"	"	"	7	5
X2 O 00433		FLOAT: tube gage regulator 78215 (36346)		EA	1					7	4
X2 O 00434	5330-818-0782	WASHER, NONMETALLIC: tube gage regulator, rubber		EA	1					7	11
X1 00435		WASHER, FLAT: nozzle to regulator, bronze, 0.250 in. id, 3/8 in. od, 0.005 in. thk 94207 (36346)		EA	2						
X1 00436		WASHER: regulator 6430-3938 (36346)		EA	2						
P O 00437	5355-981-1193	WINDOW, DIAL: pressure 72470 (36346)		EA	1		SEE	GRP	4702		
X1 00438		YOKE: regulator 61259 (36346)		EA	2						
00439		GROUP 95 - GENERAL USE STANDARDIZED PARTS									
00440		9501 - BULK MATERIEL									
P O 00441	9970-242-5019	INSULATION SHEET, ELECTRICAL		SH		"	"	"	"		
P O 00442	5330-599-7216	PAPER, GASKET		FT		"	"	"	"		
P O 00443	5330-543-7098	RUBBER SHEET, SOLID		FT		"	"	"	"		
P O 00444	5330-202-3495	RUBBER STRIP, SOLID		FT		"	"	"	"		
P O 00445	6145-160-5118	WIRE, ELECTRICAL		FT		"	"	"	"		
P O 00446	6145-635-9290	WIRE, ELECTRICAL		FT		"	"	"	"		
P O 00447	6145-160-5120	WIRE, ELECTRICAL		FT		"	"	"	"		
P O 00448	6145-669-6680	WIRE, ELECTRICAL		FT		"	"	"	"		
P O 00449	6145-160-5133	WIRE, ELECTRICAL		FT		"	"	"	"		
P O 00450	6145-504-1310	WIRE, ELECTRICAL		FT		"	"	"	"		
P O 00451	6145-669-6775	WIRE, ELECTRICAL		FT		"	"	"	"		
P O 00452	6145-160-5190	WIRE, ELECTRICAL		FT		"	"	"	"		
P O 00453	6145-295-0801	WIRE, ELECTRICAL		FT		"	"	"	"		

(1) SMR CODE	(2) FEDERAL STOCK NUMBER	(3) DESCRIPTION REF NUMBER & MFR CODE	USABLE ON CODE	(4) UNIT OF MEAS	(5) QTY INC IN UNIT	(6) 15-DAY ORGANIZATIONAL MAINTENANCE ALW (a) 1-5	(b) 6-20	(c) 21-50	(d) 51-100	(7) ILLUSTRATION (a) FIG. NO.	(b) ITEM NO.
00454		GROUP 99 - PARTS PECULIAR									
00455		9901 - MULTI-LISTED PARTS									
P O 00456	5975-669-9467	BOX CONNECTOR, ELECTRICAL 2522 (59730)		EA	4	*	*	*	2		
P O 00457	5975-296-6984	BOX CONNECTOR, ELECTRICAL 458673 (36346)		EA	3	*	*	*	2		

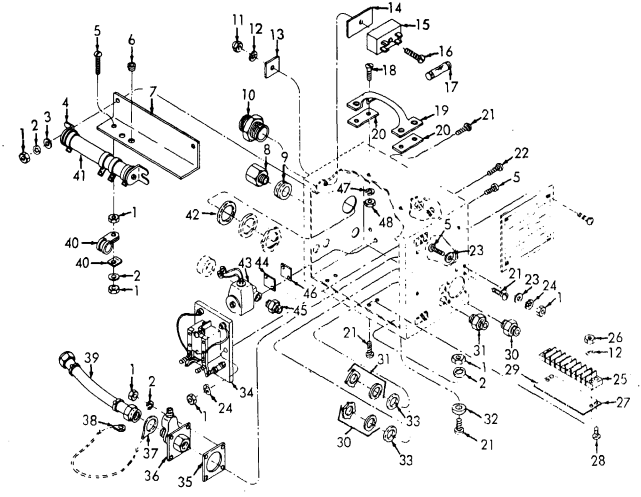

Figure 1. Control.

INDEX TO PARTS, FIGURE 1

Reference Number	Functional Group	Item Name	Reference Number	Functional Group	Item Name
1	4407	NUT	21	4411	SCREW
1	4408	NUT	22	4410	SCREW
1	4410	NUT	23	4407	WASHER
1	4411	NUT	24	4407	WASHER
2	4407	WASHER	24	4410	WASHER
2	4408	WASHER	25	4407	NUT
2	4411	WASHER	26	4408	NUT
3	4411	WASHER	27	4408	TERMINAL BOARD
4	4411	RESISTOR	28	4408	SCREW
5	4407	SCREW	29	4408	INSULATOR
5	4410	SCREW	30	4408	CONNECTOR
6	4411	GROMMET	31	4408	BOX CONNECTOR
7	4411	SHIELD	32	4407	BUMPER
8	4408	CONNECTOR	33	4408	GASKET
9	4408	GROMMET	34	4410	RELAY
10	4408	BOX CONNECTOR	35	4408	GASKET
11	4409	NUT	36	4408	CONNECTOR
12	4408	WASHER	37	4407	TERMINAL
12	4409	WASHER	38	4407	TERMINAL
13	2210	PLATE	39	4408	HOSE AY
14	4409	INSULATOR	40	4407	CLAMP
15	4409	MOUNT	41	4411	SLIDER
16	4408	SCREW	42	4408	GASKET
16	4409	SCREW	43	4410	VALVE
17	4409	FUSE	44	4410	GASKET
18	4407	SCREW	45	4408	ADAPTER
19	4407	HANDLE	46	4410	PLATE
20	4407	GASKET	47	4407	WASHER
21	4407	SCREW	48	4407	NUT
21	4408	SCREW			

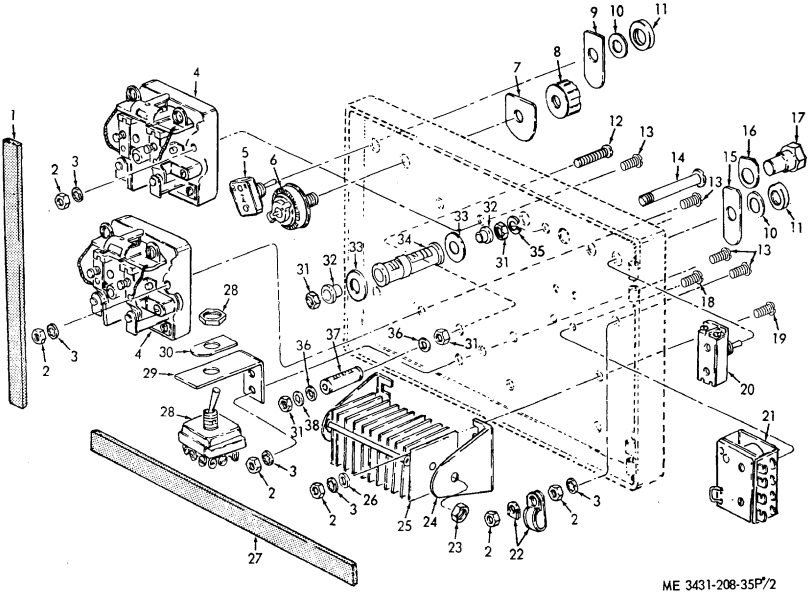

Figure 2. Rectifier, Relays, Resistors, and Switch.

INDEX TO PARTS, FIGURE 2

Reference Number	Functional Group	Item Name	Reference Number	Functional Group	Item Name
1	4407	GASKET	18	4410	SCREW
2	4407	NUT	19	4413	SCREW
2	4410	NUT	20	4410	SWITCH
2	4413	NUT	21	4410	RELAY
3	4407	WASHER	22	4407	CLAMP
3	4410	WASHER	23	4413	NUT
3	4413	WASHER	24	4413	BRACKET
4	4410	RELAY	25	4413	RECTIFIER
5	4410	SWITCH	26	4413	WASHER
6	4411	RESISTOR	27	4407	GASKET
7	2210	PLATE	28	4410	SWITCH
8	4411	KNOB	29	4410	BRACKET
9	2210	NAMEPLATE	30	2210	PLATE
10	4410	BUSHING	31	4411	NUT
11	4410	NUT	32	4411	WASHER
12	4411	SCREW	33	4411	WASHER
13	4407	SCREW	34	4411	RESISTOR
13	4410	SCREW	35	4411	WASHER
14	4411	SCREW	36	4411	WASHER
15	2210	PLATE	37	4411	RESISTOR
16	2210	PLATE	38	4411	WASHER
17	4409	FUSEHOLDER			

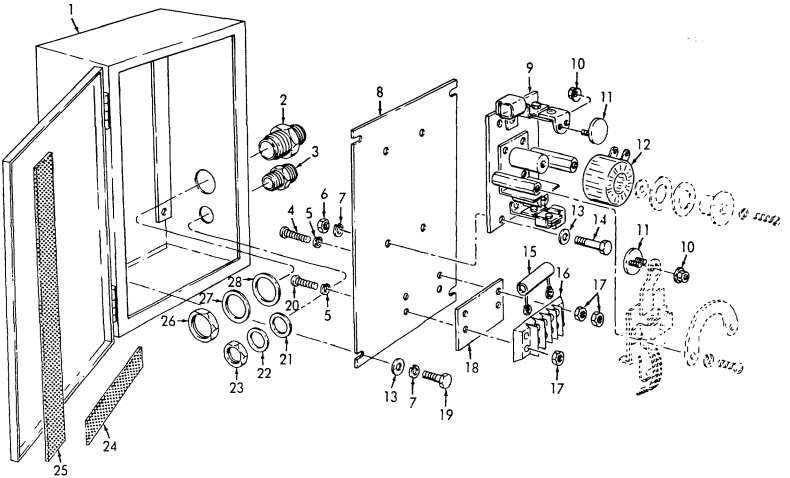

Figure 3. Contactor Box and Contactor Components.

INDEX TO PARTS, FIGURE 3

Reference Number	Functional Group	Item Name	Reference Number	Functional Group	Item Name
1	4410	CABINET	16	4408	TERMINAL BOARD
2	4408	BOX CONNECTOR	17	4408	NUT
3	4408	BOX CONNECTOR	17	4411	NUT
4	4408	SCREW	18	4408	INSULATOR
5	4408	WASHER	19	4410	SCREW
6	4410	NUT	20	4408	SCREW
7	4410	WASHER	21	4408	GASKET
8	4410	PANEL	22	4408	WASHER
9	4410	CONTACTOR	23	4408	LOCKNUT
10	4410	NUT	24	4410	GASKET
11	4410	CONTACT	25	4410	GASKET
12	4410	COIL	26	4408	LOCKNUT
13	4410	WASHER	27	4408	WASHER
14	4410	SCREW	28	4408	GASKET
15	4411	RESISTOR			

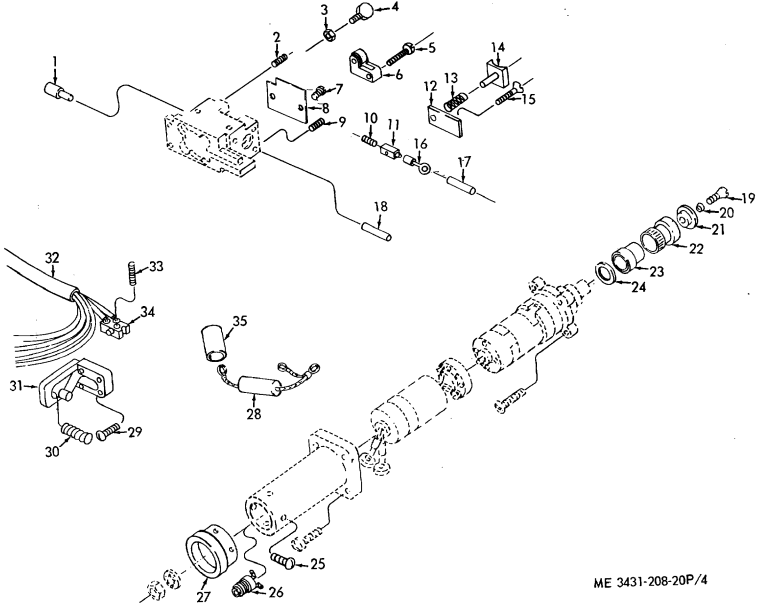

Figure 4. Motor and Housing.

INDEX TO PARTS, FIGURE 4

Reference Number	Functional Group	Item Name	Reference Number	Functional Group	Item Name
1	4415	BUSHING	19	4415	SCREW
2	4415	SETSCREW	20	4415	WASHER
3	4415	NUT	21	4415	RETAINER
4	4415	THUMBSCREW	22	4415	SLEEVE
5	4415	SCREW	23	4415	SHAFT AY
6	4415	PRESSURE ROLL	24	4415	WASHER
7	2210	SCREW	25	4415	SCREW
8	2210	PLATE	26	4415	SWITCH
9	4415	SETSCREW	27	4415	ENDPLATE
10	4415	SETSCREW	28	4415	CAPACITOR AY
11	4415	BLOCK-LEAD	29	4415	SCREW
12	4415	BLOCK	30	4415	SPRING
13	4415	SPRING	31	4415	**TRIGGER AY**
14	4415	SHOE	32	4408	CORD AY
15	4415	SCREW	33	4410	SCREW
16	4415	TERMINAL	34	4410	SWITCH
17	4415	INSULATOR SLEEVE	35	4415	INSULATOR SLEEVE
18	4415	BUSHING			

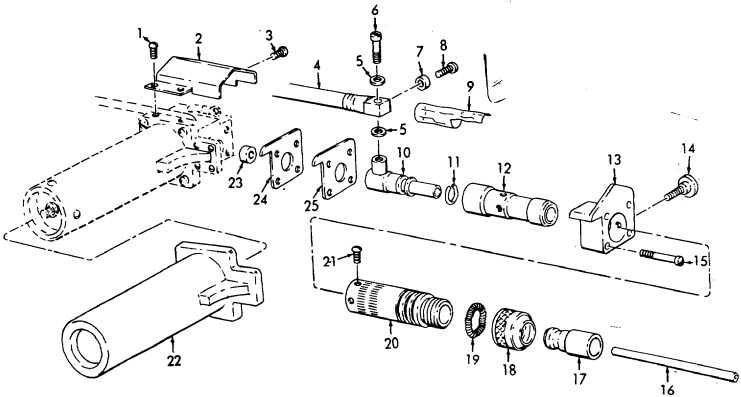

ME 3431-208-35P/5

Figure 5. Nozzle.

INDEX TO PARTS, FIGURE 5

Reference Number	Functional Group	Item Name
1	4415	SCREW
2	4415	SHIELD
3	4415	SCREW
4	4408	CABLE AY
5	4408	WASHER
6	4408	SCREW
7	4415	SPACER
8	4415	SCREW
9	4408	INSULATOR SLEEVE
10	4415	BODY
11	4415	INSULATOR
12	4415	SLEEVE
13	4415	HOUSING
14	4415	SCREW
15	4415	SCREW
16	4415	TUBE
17	4415	NOZZLE
18	4415	RETAINER
19	4415	SPRING
20	4415	HOLDER
21	4415	SCREW
22	4415	BOOT
23	4415	BUSHING
24	4415	INSULATOR
25	4415	GASKET

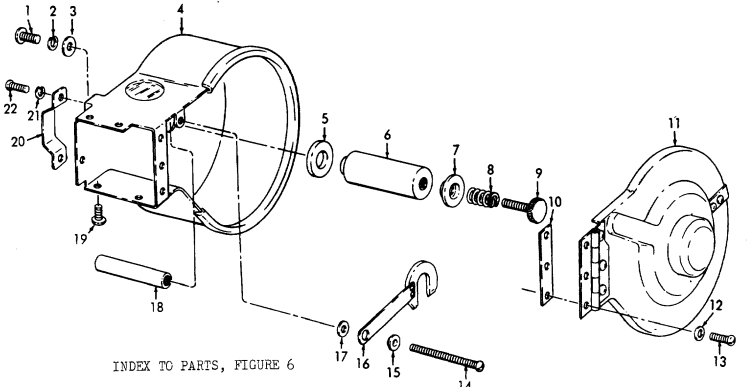

ME 3431-208-35P/6

INDEX TO PARTS, FIGURE 6

Reference Number	Functional Group	Item Name	Reference Number	Functional Group	Item Name
1	4415	SCREW	12	4415	WASHER
2	4415	WASHER	13	4415	SCREW
3	4415	WASHER	14	4415	SCREW
4	4415	ENCLOSURE	15	4415	RETAINER
5	4415	WASHER	16	4415	DISK AY
6	4415	SHAFT	17	4415	WASHER
7	4415	RING	18	4415	ROLLER
8	4415	SPRING	19	4415	SCREW
9	4415	SCREW	20	4415	CLAMP
10	4415	SHIM	21	4415	WASHER
11	4415	COVER AY	22	4415	SCREW

Figure 6. Spool Enclosure and Components.

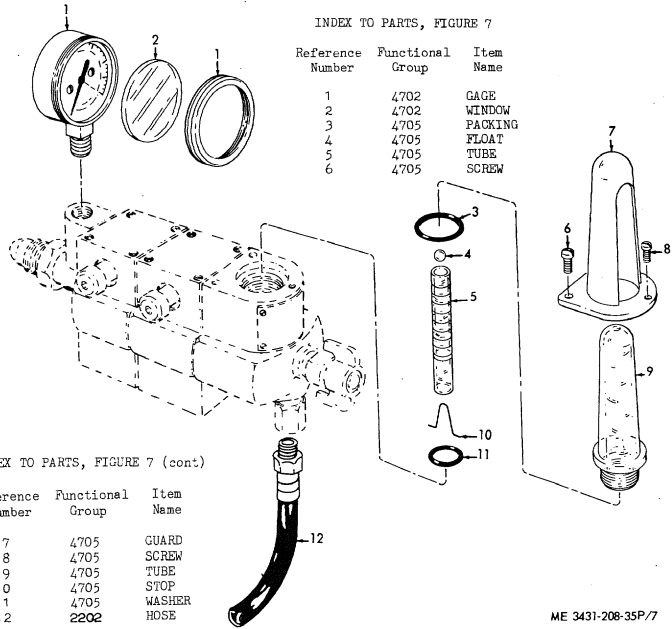

INDEX TO PARTS, FIGURE 7

Reference Number	Functional Group	Item Name
1	4702	GAGE
2	4702	WINDOW
3	4705	PACKING
4	4705	FLOAT
5	4705	TUBE
6	4705	SCREW

INDEX TO PARTS, FIGURE 7 (cont)

Reference Number	Functional Group	Item Name
7	4705	GUARD
8	4705	SCREW
9	4705	TUBE
10	4705	STOP
11	4705	WASHER
12	2202	HOSE

Figure 7. Argon Regulator.

SECTION V. INDEX-FEDERAL STOCK NUMBER AND REFERENCE NUMBER CROSS-REFERENCE TO INDEX NUMBER

STOCK NUMBER	INDEX NUMBER
3431-018-3096	00142
3431-018-3097	00140
3431-018-3098	00141
3431-859-4227	00364
3431-859-4239	00134
3431-859-4239	00303
3431-859-4240	00298
3431-859-4241	00089
3431-859-4241	00256
3431-859-4242	00094
3431-859-4242	00258
3431-859-4243	00044
3431-859-4243	00161
3431-893-3123	00329
3431-893-3124	00373
3431-893-3126	00363
3431-893-3128	00301
3431-893-3130	00302
3431-893-3134	00362
3431-977-5381	00324
3431-977-5382	00197
3431-977-5382	00304
3431-977-5383	00299
3431-977-5385	00204
3431-977-5386	00388
3431-977-5387	00024
3431-977-5387	00131
3431-977-5388	00150
3431-977-5388	00307
3431-977-5389	00333
3431-977-5390	00367
3431-977-5391	00309
3431-977-5392	00028
3431-977-5392	00147
3431-977-5393	00325
3431-977-5394	00326
3431-977-5395	00319
3431-977-5396	00027
3431-977-5396	00146
3431-981-1033	00323
3431-981-1034	00429
3431-981-1035	00432
3431-981-1036	00003
3439-775-6476	00004
5305-012-1832	00289
5305-012-1832	00350
5305-013-2631	00339
5305-013-2636	00352
5305-013-2688	00077
5305-013-2688	00248
5305-013-2688	00341
5305-013-2711	00171
5305-013-2711	00174
5305-013-2711	00192
5305-013-2711	00224
5305-013-2719	00172
5305-013-2719	00175
5305-013-2719	00223
5305-013-2723	00349
5305-013-2727	00082
5305-013-2727	00274
5305-013-2727	00344
5305-013-2735	00343
5305-019-2207	00076
5305-019-2207	00273
5305-019-2662	00252
5305-019-2662	00353
5305-053-1108	00312
5305-068-0502	00222
5305-071-2239	00221
5305-207-3239	00346
5305-290-2046	00342
5305-515-7156	00414
5305-717-6955	00295
5305-719-5339	00355
5305-719-5353	00356
5305-889-3116	00173
5305-889-3116	00337
5305-889-3116	00345
5305-977-5512	00354
5305-984-4976	00336
5305-984-4976	00338
5305-984-6192	00351
5305-984-6193	00251
5305-984-6194	00075
5305-984-6194	00078
5305-984-6194	00079
5305-984-6194	00080
5305-984-6194	00081
5305-984-6194	00085
5305-984-6194	00176
5305-984-6194	00250
5305-984-6194	00272
5305-984-6210	00347
5305-984-7363	00084
5310-012-0386	00229
5310-013-1044	00097
5310-013-1044	00182
5310-013-1044	00183
5310-013-1044	00193
5310-013-1044	00233
5310-013-1044	00280
5310-042-6903	00057
5310-042-6903	00287
5310-043-2226	00380
5310-045-3299	00100
5310-045-3299	00184
5310-045-3299	00279
5310-045-3299	00381
5310-082-1404	00095
5310-082-1404	00278
5310-187-1851	00181
5310-187-1851	00378
5310-187-1868	00096
5310-261-3109	00191
5310-262-4481	00290
5310-262-6169	00050
5310-262-6169	00055
5310-262-6169	00167
5310-262-6169	00168

SECTION V. INDEX-FEDERAL STOCK NUMBER AND REFERENCE NUMBER CROSS-REFERENCE TO INDEX NUMBER (Continued)

STOCK NUMBER	INDEX NUMBER	STOCK NUMBER	INDEX NUMBER
5310-262-6169	00215	5920-280-4465	00186
5310-262-6169	00265	5930-239-3661	00253
5310-262-6169	00266	5930-239-3661	00369
5310-527-3288	00105	5930-615-9182	00090
5310-543-2410	00379	5930-615-9182	00257
5310-559-0070	00098	5930-655-1508	00088
5310-559-0070	00099	5930-655-1508	00255
5310-559-0070	00101	5930-977-8915	00254
5310-559-0070	00102	5930-977-8915	00376
5310-559-0070	00103	5940-983-6082	00177
5310-559-0070	00104	5940-983-6082	00226
5310-559-0070	00106	5940-983-6086	00091
5310-559-0070	00259	5940-983-6086	00178
5310-559-0070	00260	5945-173-8320	00069
5310-559-0070	00291	5945-173-8320	00245
5310-579-0070	00281	5945-826-0433	00070
5310-582-5965	00232	5945-826-0433	00246
5310-720-7798	00059	5945-859-4497	00071
5310-761-6882	00216	5945-859-4497	00247
5310-934-9757	00051	5970-242-5019	00189
5310-934-9757	00052	5970-242-5019	00283
5310-934-9757	00053	5970-242-5019	00441
5310-934-9757	00054	5975-296-6984	00019
5310-934-9757	00056	5975-296-6984	00128
5310-934-9757	00058	5975-296-6984	00130
5310-934-9757	00169	5975-296-6984	00200
5310-934-9757	00242	5975-296-6984	00457
5310-934-9757	00243	5975-669-9467	00018
5310-934-9757	00264	5975-669-9467	00127
5310-934-9757	00286	5975-669-9467	00129
5310-934-9757	00327	5975-669-9467	00199
5310-950-1310	00375	5975-669-9467	00456
5330-202-3495	00033	6130-859-4496	00068
5330-202-3495	00035	6130-859-4496	00288
5330-202-3495	00206	6145-160-5118	00114
5330-202-3495	00210	6145-160-5118	00237
5330-202-3495	00444	6145-160-5118	00445
5330-543-7098	00152	6145-160-5120	00108
5330-543-7098	00154	6145-160-5120	00235
5330-543-7098	00156	6145-160-5120	00447
5330-543-7098	00159	6145-160-5133	00116
5330-543-7098	00443	6145-160-5133	00449
5330-599-7216	00361	6145-160-5190	00124
5330-599-7216	00442	6145-160-5190	00452
5330-818-0782	00434	6145-295-0801	00120
5340-893-3133	00366	6145-295-0801	00453
5355-981-1193	00386	6145-504-1310	00122
5355-981-1193	00437	6145-504-1310	00239
5905-101-6865	00220	6145-504-1310	00450
5905-101-6865	00269	6145-635-9290	00110
5905-173-6693	00268	6145-635-9290	00446
5905-549-5659	00076	6145-669-6680	00112
5905-549-5659	00271	6145-669-6680	00448
5905-686-2872	00073	6145-669-6775	00118
5905-686-2872	00270	6145-669-6775	00451
5905-834-7831	00072	6685-981-1194	00385
5905-834-7831	00267	6685-981-1194	00397
5920-280-4465	00030		

SECTION V. INDEX-FEDERAL STOCK NUMBER AND REFERENCE NUMBER CROSS-REFERENCE TO INDEX NUMBER (Continued)

REFERENCE NO.	MFG CODE	INDEX NO.	REFERENCE NO.	MFG CODE	INDEX NO.
MS26629-11	96906	00348	458673	36346	00200
MS27183-8	96906	00377	458673	36346	00457
MS35206-249	96906	00083	458674	36346	00031
MS35206-249	96906	00249	458674	36346	00187
MS35214-25	96906	00340	458675	36346	00068
0150	44655	00074	458675	36346	00288
0150	44655	00271	458676	36346	00020
02221	36346	00403	458676	36346	00285
0373	44655	00268	458677	36346	00094
04X34	36346	00388	458677	36346	00258
05236	36346	00411	458679	36346	00087
06N11	36346	00045	458679	36346	00276
06N11	36346	00164	458695	36346	00143
06N52	36346	00211	458686	36346	00132
06N52	36346	00162	458686	36346	00137
1-2-6	95987	00026	458687	36346	00071
1X885	44655	00073	458687	36346	00247
1X885	44655	00270	458688	36346	00049
1X78	36346	00010	458688	36346	00241
1X78	36346	00064	458689	36346	00023
150229	36346	00427	458698	36346	00196
180473	36346	00029	458692	36346	00086
180473	36346	00148	458692	36346	00275
180474	36346	00166	458697	36346	00026
180474	36346	00212	458703	36346	00039
181X34	36346	00254	458703	36346	00157
181X34	36346	00370	458704	36346	00044
250781X29	56365	00202	458704	36346	00161
250743	56365	00225	458705	36346	00142
2522	59730	00018	458709	36346	00037
2522	59730	00127	458709	36346	00153
2522	59730	00129	458709	36346	00155
2522	59730	00199	458709	36346	00208
2522	59730	00456	458710	36346	00040
27X70	36346	00437	458710	36346	00151
29202	36346	00425	458710	36346	00158
29204	36346	00424	458710	36346	00207
29224	36346	00421	458713	36346	00067
29225	36346	00422	458713	36346	00244
30257	36346	00410	458714	36346	00038
30258	36346	00396	458714	36346	00240
31263	36346	00395	458716	36346	00140
31264	36346	00392	458717	36346	00141
31273	36346	00394	458718	36346	00180
31275	36346	00393	458718	36346	00231
32260	36346	00417	458719	36346	00179
32265	36346	00404	458719	36346	00230
33748	36346	00426	458721	36346	00036
33756	36346	00418	459789	36346	00134
3341801	56365	00203	459789	36346	00303
3389	36346	00017	459790	36346	00150
3389	36346	00126	459790	36346	00307
34263	36346	00419	46N16	36346	00006
34266	36346	00428	46N16	36346	00048
457664	36346	00217	48N11	36346	00316
458670	36346	00009	48N18	36346	00317
458670	36346	00062	48N19	36346	00315
458673	36346	00019	48N20	36346	00300
458673	36346	00128	48N21	36346	00314
458673	36346	00130	48N27	36346	00170

REFERENCE NO.	MFG CODE	INDEX NO.	REFERENCE NO.	MFG CODE	INDEX NO.
48N27	36346	00335	521075	36346	00007
48N29	36346	00163	521075	36346	00219
48N29	36346	00320	521076	36346	00063
48N30	36346	00359	521078	36346	00003
48N33	36346	00376	521179	36346	00322
48N36	36346	00382	521180	36346	00293
48N37	36346	00311	521286	36346	00306
48N38	36346	00310	521287	36346	00197
48N39	36346	00332	521287	36346	00304
48N42	36346	00368	521289	36346	00313
48N43	36346	00330	528286	36346	00149
48N45	36346	00333	55N78	36346	00323
48N48	36346	00371	55N88	36346	00324
48N49	36346	00305	55N89	36346	00325
48N50	36346	00367	55N90	36346	00326
48N51	36346	00321	55X44	36346	00432
48N53	36346	00373	56N17	36346	00319
48N56	36346	00301	56N32	36346	00299
48N59	36346	00302	61259	36346	00438
48N67	36346	00012	6170-0851	36346	00415
48N67	36346	00066	6170-0878	36346	00416
48N74	36346	00365	6170-6882	36346	00413
48N75	36346	00331	6170-6911	36346	00412
48N78	36346	00318	627Y14	36346	00385
48N82	36346	00362	627Y14	36346	00397
48N83	36346	00297	63-300-121	36346	00214
48N85	36346	00366	6310-0927	36346	00406
48V03	36346	00298	6372-0100	36346	00405
48V05	36346	00329	6430-3939	36346	00436
48V07	36346	00372	68270	36346	00400
48V08	36346	00364	72470	36346	00386
48V09	36346	00354	74876	36346	00027
48V15	36346	00357	74876	36346	00146
48V16	36346	00358	77267	36346	00423
48V17	36346	00309	77269	36346	00398
48V18	36346	00334	77272	36346	00401
48V25	36346	00028	77273	36346	00402
48V25	36346	00147	78215	36346	00433
48V35	36346	00363	78262	36346	00431
48V36	36346	00294	80N29	36346	00069
48V45	36346	00308	80N29	36346	00245
48B349	36346	00204	80N09	36346	00089
488796	36346	00227	80N09	36346	00256
49N82	36346	00374	80X50	36346	00389
5052R87	36346	00004	80Z51	36346	00390
52N31	36346	00021	80Z83	36346	00391
52N31	36346	00195	82N43	36346	00030
52Z34	36346	00430	82N43	36346	00186
521060	36346	00016	82Z43	36346	00399
521066	36346	00043	84N84	36346	00409
521067	36346	00198	84N85	36346	00408
521068	36346	00025	85W37	36346	00407
521068	36346	00135	89N80	36346	00072
521069	36346	00201	89N80	36346	00267
521071	36346	00008	89N81	36346	00246
521071	36346	00060	89N81	36346	00263
521072	36346	00011	90A23	36346	00136
521072	36346	00065	90A24	36346	00138
521073	36346	00061	90W30	36346	00088
521074	36346	00218	91W66	36346	00091

SECTION V. INDEX–FEDERAL STOCK NUMBER AND REFERENCE NUMBER CROSS–REFERENCE TO INDEX NUMBER (*Continued*)

REFERENCE NO.	MFG CODE	INDEX NO.	REFERENCE NO.	MFG CODE	INDEX NO.
91W66	36346	00178	95W22	36346	00269
92W11	36346	00177	95W39	36346	00144
92W11	36346	00226	96W10	36346	00047
92W57	36346	00041	96W10	36346	00190
92W57	36346	00160	96W38	36346	00057
92W58	36346	00277	96R38	36346	00090
92201	36346	00420	97	70485	00042
93W77	36346	00092	97	70485	00262
93W77	36346	00133	97W14	36346	00282
93W77	36346	00139	97W44	36346	00165
93W77	36346	00145	97W44	36346	00213
93W77	36346	00228	97W55	36346	00070
93W77	36346	00296	97W55	36346	00246
94207	36346	00435	98W66	36346	00253
95N37	36346	00013	98W66	36346	00369
95N37	36346	00328	98W73	36346	00022
95W22	36346	00220	98W84	36346	00093

TM 5-3431-208-20P

By Order of the Secretary of the Army:

W. C. WESTMORELAND,
General, United States Army,
Chief of Staff.

Official:

KENNETH G. WICKHAM,
Major General, United States Army,
The Adjutant General.

Distribution:

To be distributed in accordance with DA Form 12-25, Section I, (qty rqr block no. 182) organizational maintenance requirements for Welding Equipment.

☆U.S. GOVERNMENT PRINTING OFFICE : 1989 O - 242-451 (5172)

TM 5-3431-208-20P WELDING SET, ARC, INERT GAS SHIELDED—1970

PIN : 025504-000